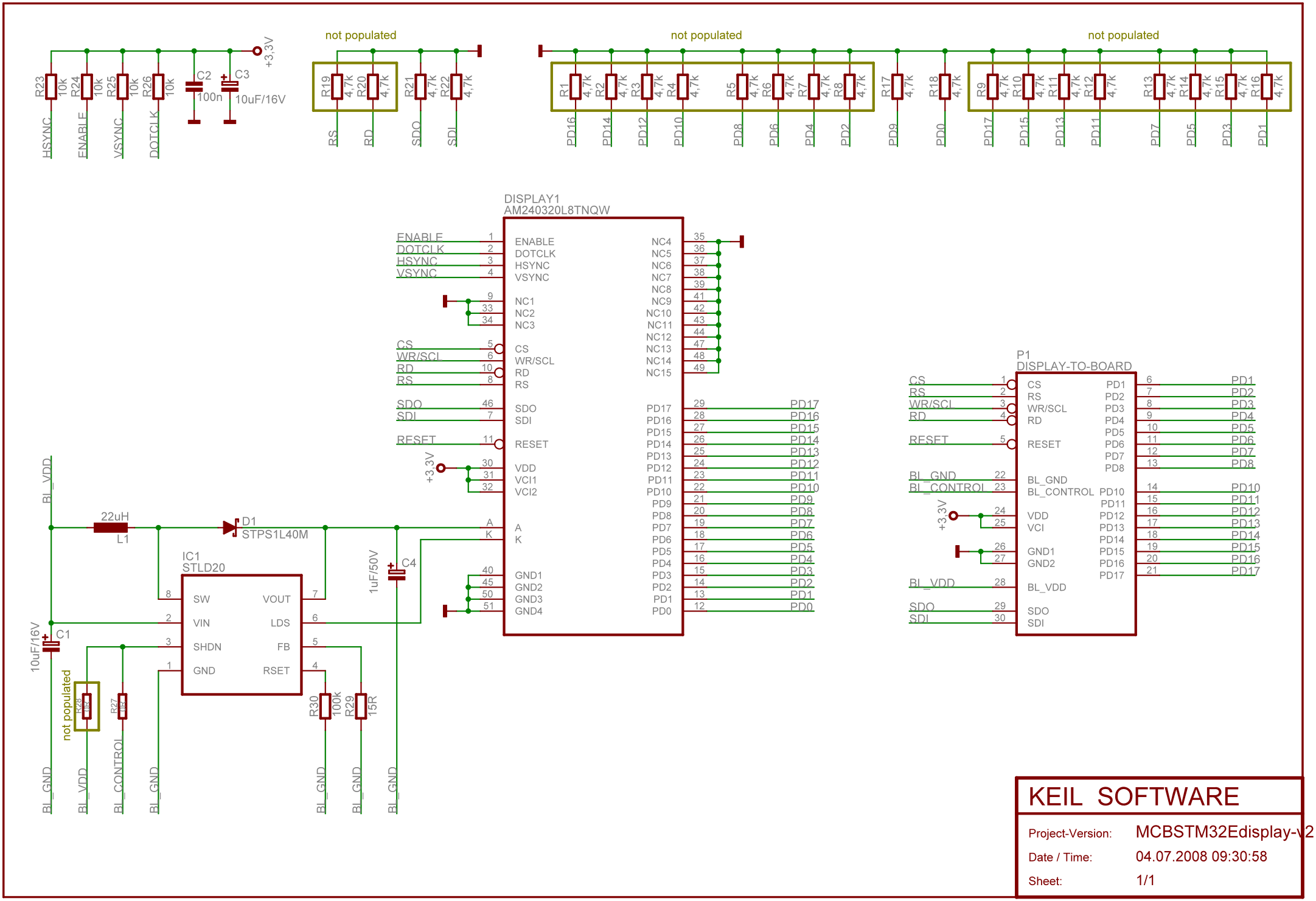
not populated
not populated
not populated
R23 10k HSYNC
R24 10k ENABLE
R25 10k VSYNC
R26 10k DOTCLK
C2 100n
C3 10uF/16V
+3,3V
R19 4,7k RS
R20 4,7k RD
R21 4,7k SDO
R22 4,7k SDI
R1 4,7k PD16
R2 4,7k PD14
R3 4,7k PD12
R4 4,7k PD10
R5 4,7k PD8
R6 4,7k PD6
R7 4,7k PD4
R8 4,7k PD2
R17 4,7k PD9
R18 4,7k PD0
R9 4,7k PD17
R10 4,7k PD15
R11 4,7k PD13
R12 4,7k PD11
R13 4,7k PD7
R14 4,7k PD5
R15 4,7k PD3
R16 4,7k PD1
DISPLAY1
AM240320L8TNQW
ENABLE 1
DOTCLK 2
HSYNC 3
VSYNC 4
NC1 9
NC2 33
NC3 34
CS 5
WR/SCL 6
RD 10
RS 8
SDO 46
SDI 7
RESET 11
VDD 30
VCI1 31
VCI2 32
A
K
GND1 40
GND2 45
GND3 50
GND4 51
NC4 35
NC5 36
NC6 37
NC7 38
NC8 39
NC9 41
NC10 42
NC11 43
NC12 44
NC13 47
NC14 48
NC15 49
PD17 29
PD16 28
PD15 27
PD14 26
PD13 25
PD12 24
PD11 23
PD10 22
PD9 21
PD8 20
PD7 19
PD6 18
PD5 17
PD4 16
PD3 15
PD2 14
PD1 13
PD0 12
P1
DISPLAY-TO-BOARD
CS 1
RS 2
WR/SCL 3
RD 4
RESET 5
BL_GND 22
BL_CONTROL 23
VDD 24
VCI 25
GND1 26
GND2 27
BL_VDD 28
SDO 29
SDI 30
PD1 6
PD2 7
PD3 8
PD4 9
PD5 10
PD6 11
PD7 12
PD8 13
PD10 14
PD11 15
PD12 16
PD13 17
PD14 18
PD15 19
PD16 20
PD17 21
BL_VDD
22uH
L1
D1
STPS1L40M
IC1
STLD20
SW 8
VIN 2
SHDN 3
GND 1
VOUT 7
LDS 6
FB 5
RSET 4
1uF/50V
C4
C1
10uF/16V
not populated
R28
R27
R30 100k
R29 15R
BL_GND
BL_VDD
BL_CONTROL
BL_GND
BL_GND
BL_GND
BL_GND
KEIL SOFTWARE
Project-Version: MCBSTM32Edisplay-v2
Date / Time: 04.07.2008 09:30:58
Sheet: 1/1