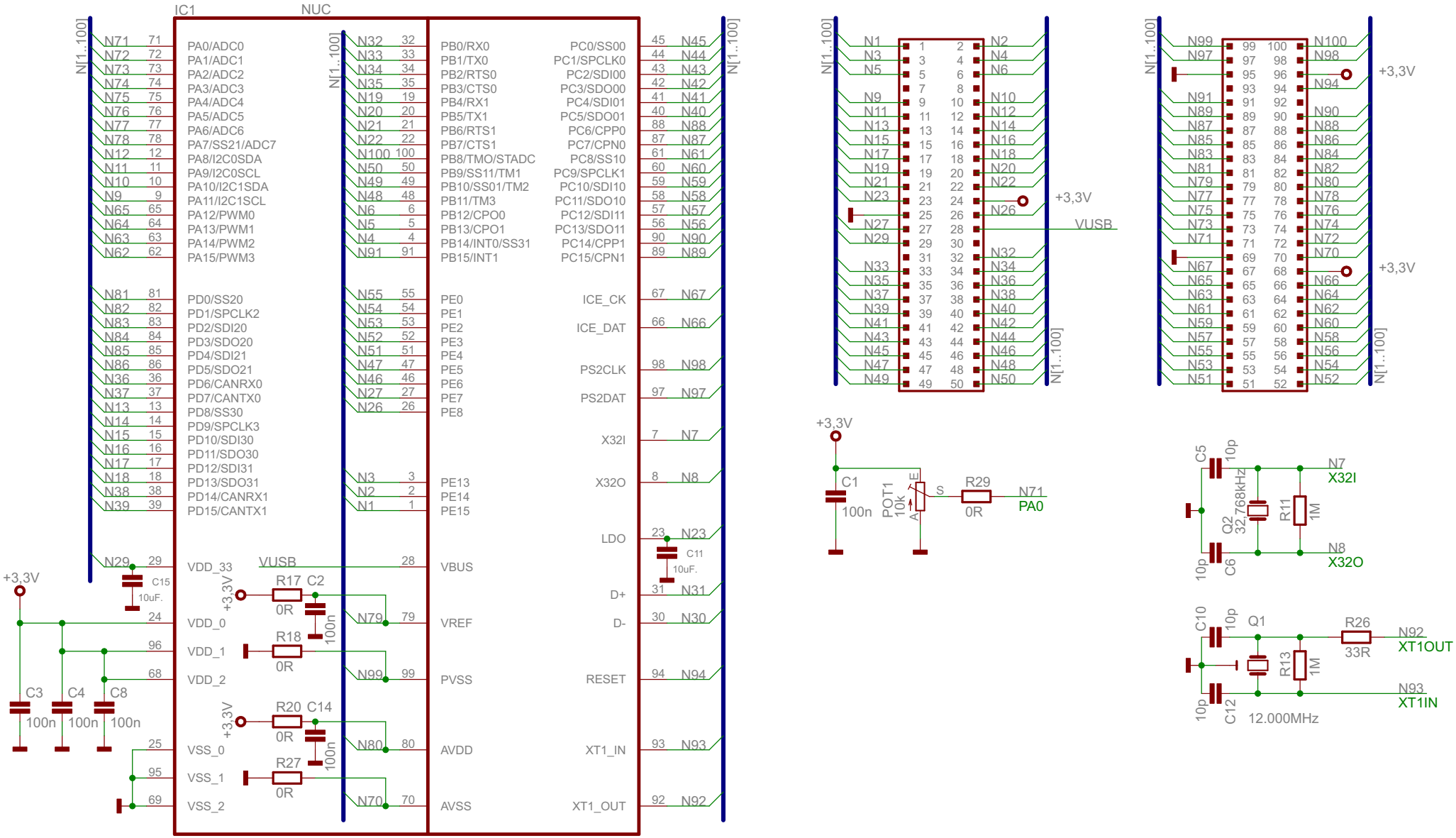

KEIL SOFTWARE

Project-Version:	MCBNUC1XX-v13
Date / Time:	29.01.2010 08:45:12
Sheet:	1/2

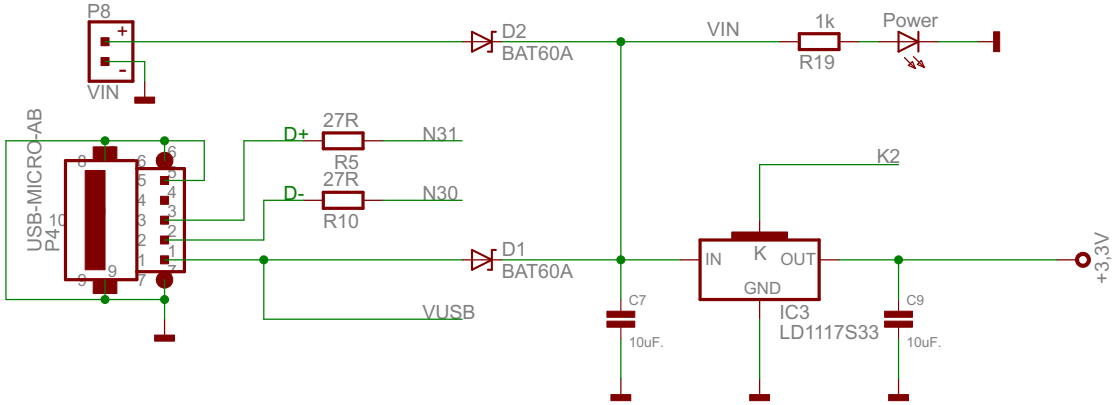

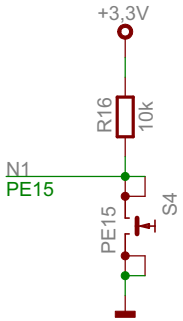

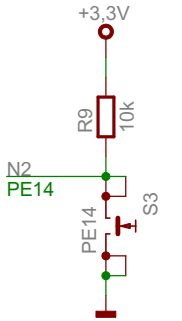

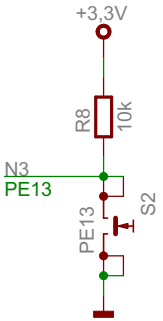

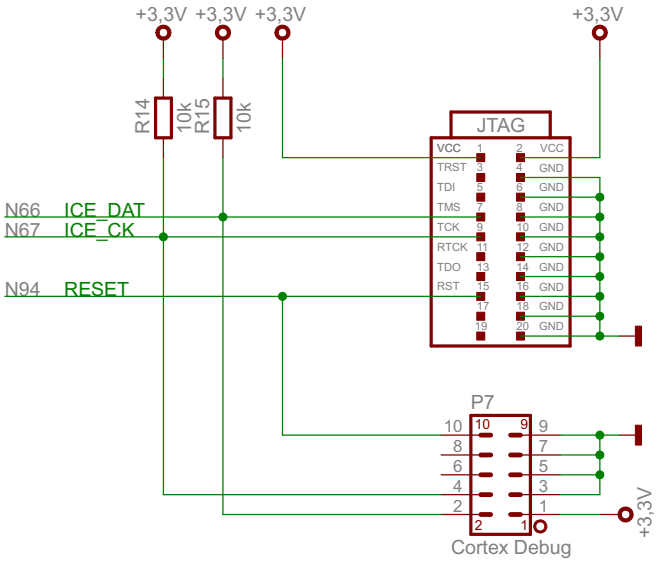

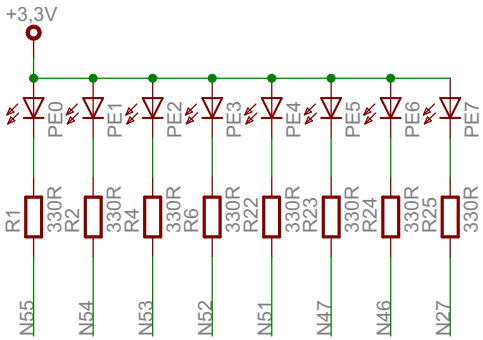

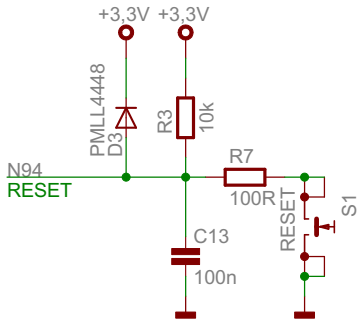

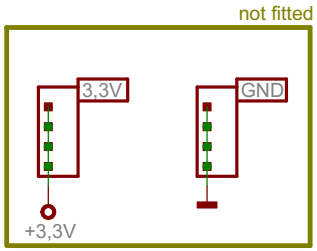

KEIL SOFTWARE

Project-Version:	MCBNUC1XX-v13
Date / Time:	29.01.2010 08:45:12
Sheet:	2/2